Rev	AWO #	Description	Date	Appr
-		RELEASED	11/02/10	

APPROVED: _____

DATE: _____ TITLE: _____

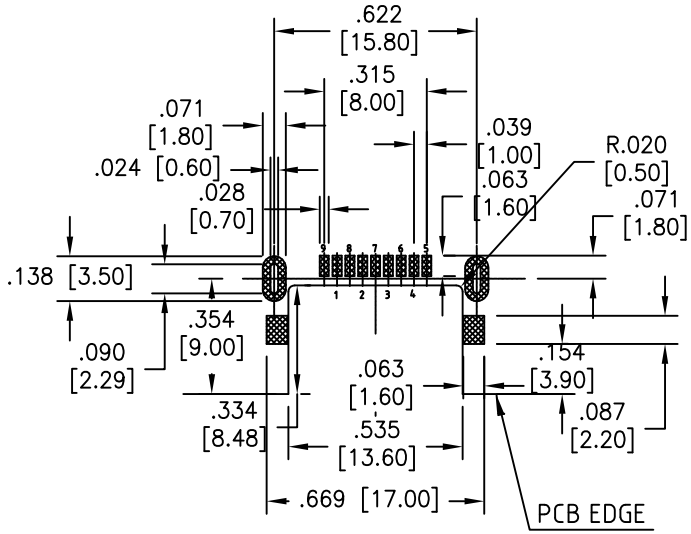

RECOMMENDED PCB LAYOUT

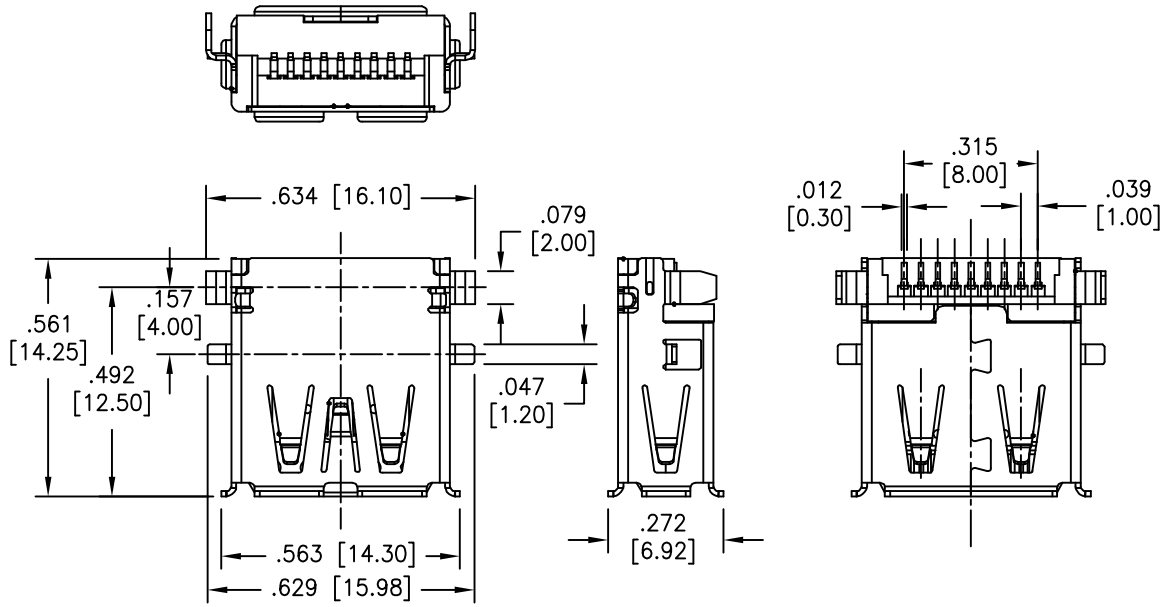

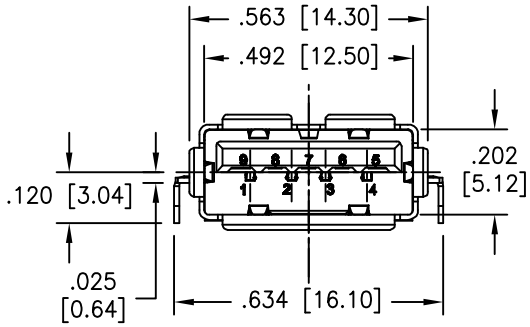

SPECIFICATIONS:
Material:
Insulator: Hi-temp thermoplastic, rated UL 94V-0
Contacts: Brass
Shell: Steel, Nickel plated
Plating:
Gold over Nickel underplate on contact area,
Tin over Copper underplate on solder tails.
Electrical:
Current rating: 1.5A Max.
Contact resistance: 30 mohms max.
Insulation resistance: 1000 Mohms min. @ DC 500V
Dielectric withstanding: 500 VAC for 1 minute
Temperature Rating:
Operating temperature: -40°C to +85°C
Environmental:
Lead free, RoHS compliant.
Recommended soldering temp: 260°C for 5 sec.

RoHS COMPLIANT

UNLESS OTHERWISE SPECIFIED
ALL DIMENSIONS ARE MM
TOLERANCES: EXCEPT AS NOTED

INCHES		HOLES	
.X	± .10	Ø.X	±.10
.XX	± .020	Ø.XX	±.015
.XXX	± .015	Ø.XXX	±.010

APPROVALS		DATE
DRAWN	DY	11/02/10
CHECKED		
APPROVED		

ADAM TECH
909 Rahway Avenue, Union, NJ 07083
Phone: 908-687-5000 Fax: 908-687-5710

TITLE: UNIVERSAL SERIAL BUS 3.0, TYPE A, FEMALE, METAL SHIELD, SMT TYPE

SIZE	PART NO.	REV.
X	USB-A3-S-RA-SMT	-

REF: S00042C | SCALE: NTS | SHEET 1 OF 1